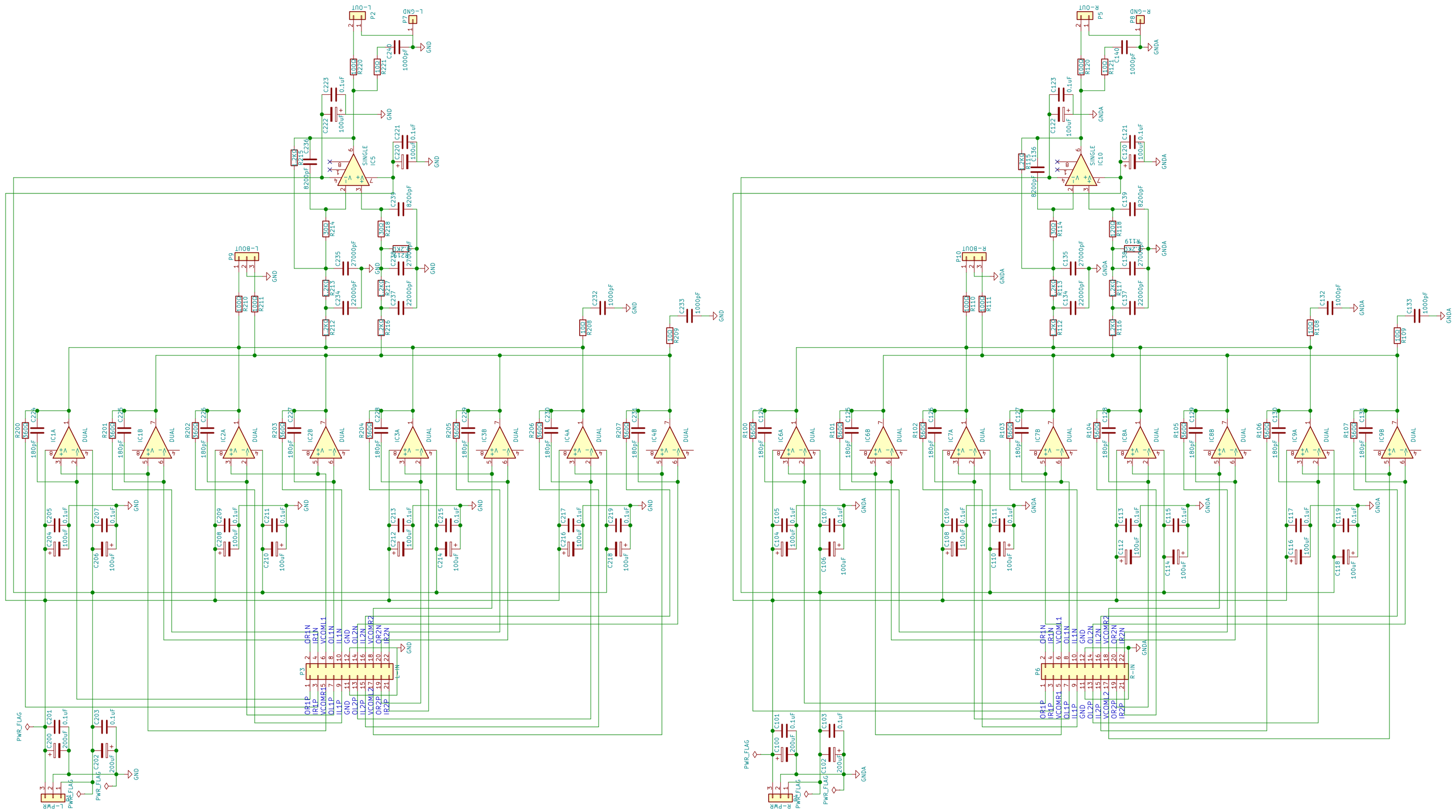

Sheet: /
File: IV OPEAMP3.sch

Title:

Size: A2 | Date:
KiCad E.D.A. kicad 4.0.7

Rev:
Id: 1/1