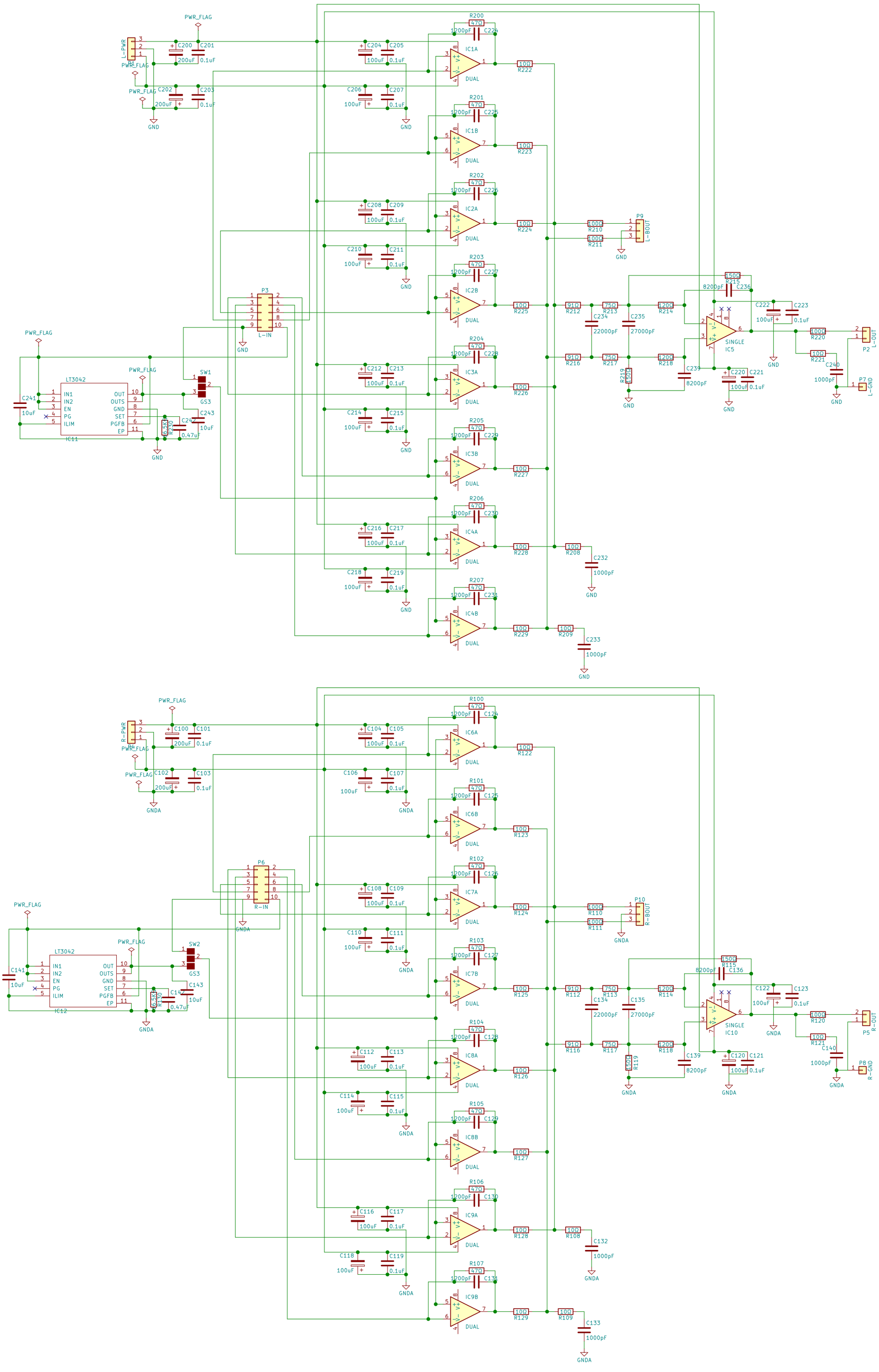

Sheet: /	
File: IV OPEAMP2.sch	
Title:	
Size: A2 Date:	**Rev:**
KiCad E.D.A. kicad 4.0.7	Id: 1/1