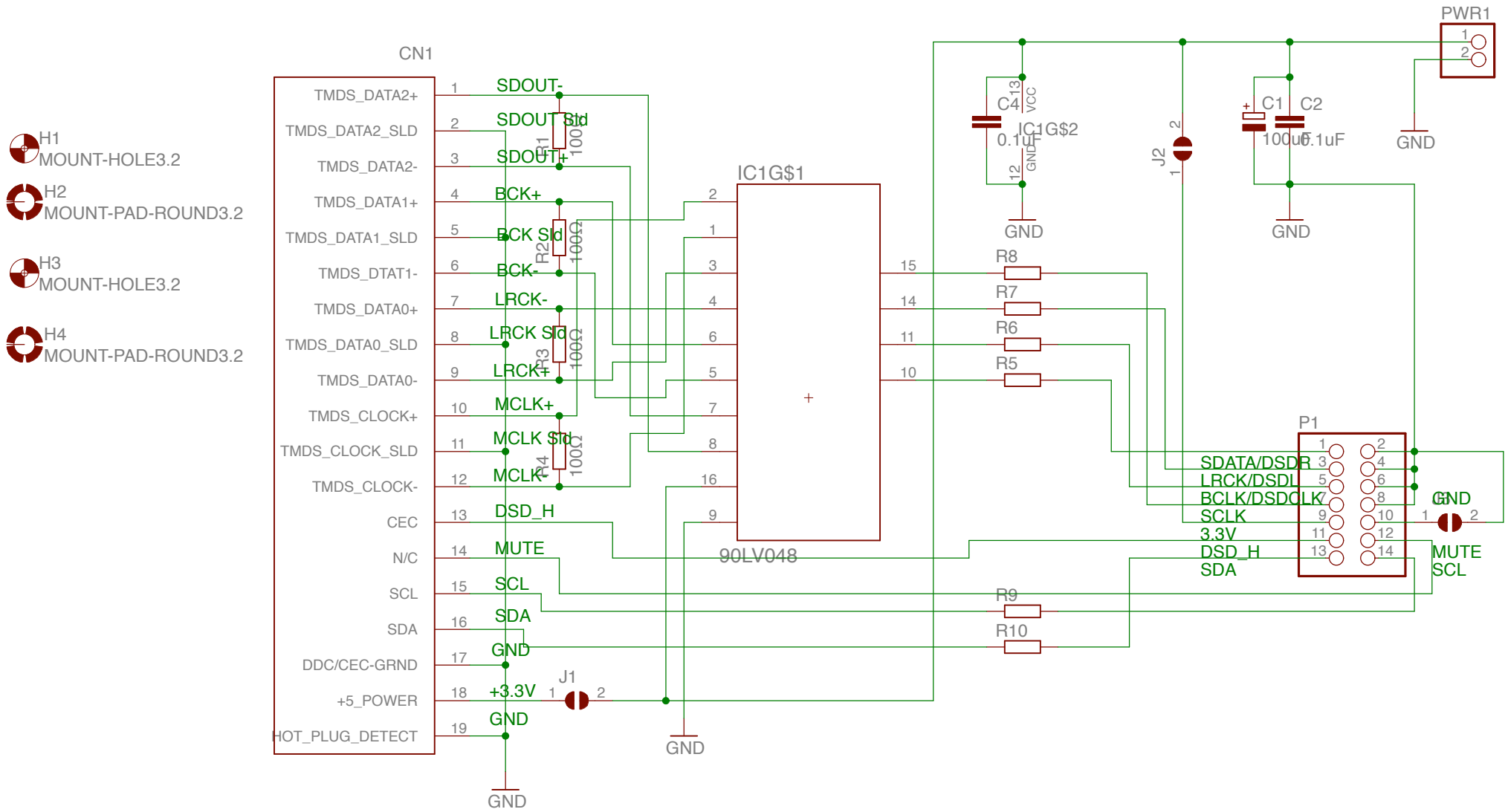
H1
MOUNT-HOLE3.2
H2
MOUNT-PAD-ROUND3.2
H3
MOUNT-HOLE3.2
H4
MOUNT-PAD-ROUND3.2
CN1
TMDS_DATA2+
TMDS_DATA2_SLD
TMDS_DATA2-
TMDS_DATA1+
TMDS_DATA1_SLD
TMDS_DTAT1-
TMDS_DATA0+
TMDS_DATA0_SLD
TMDS_DATA0-
TMDS_CLOCK+
TMDS_CLOCK_SLD
TMDS_CLOCK-
CEC
N/C
SCL
SDA
DDC/CEC-GRND
+5_POWER
HOT_PLUG_DETECT
SDOUT-
SDOUT Sld
SDOUT+
BCK+
BCK Sld
BCK-
LRCK-
LRCK Sld
LRCK+
MCLK+
MCLK Sld
MCLK-
DSD_H
MUTE
SCL
SDA
GND
+3.3V
GND
R1
R2
R3
R4
100Ω
J1
GND
IC1G$1
90LV048
GND
C4
0.1uF
IC1G$2
VCC
GND
GND
J2
C1
100uF
C2
0.1uF
GND
PWR1
GND
R8
R7
R6
R5
R9
R10
P1
SDATA/DSDR
LRCK/DSDL
BCLK/DSDCLK
SCLK
3.3V
DSD_H
SDA
GND
MUTE
SCL